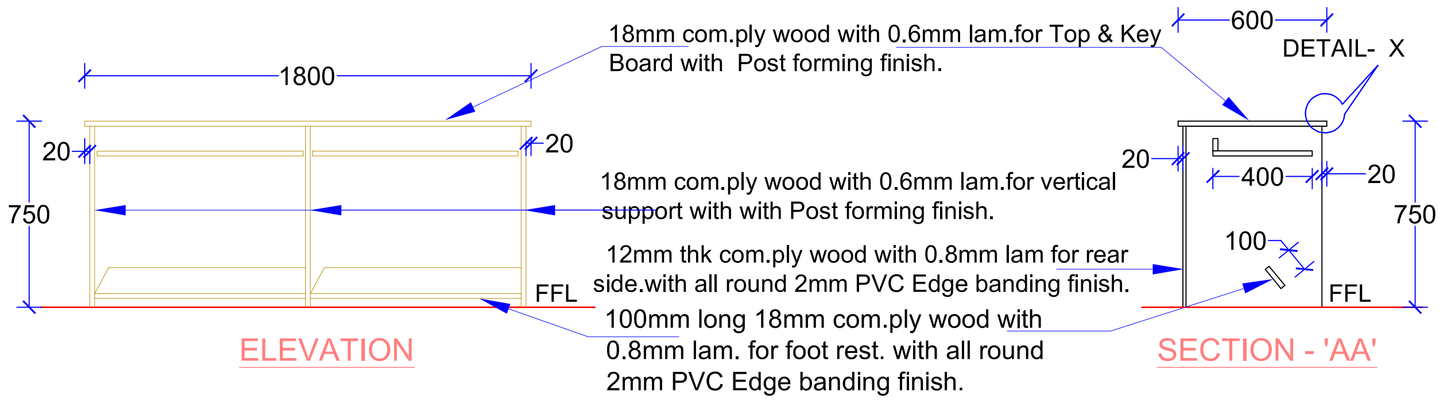

ELEVATION

SECTION - 'AA'

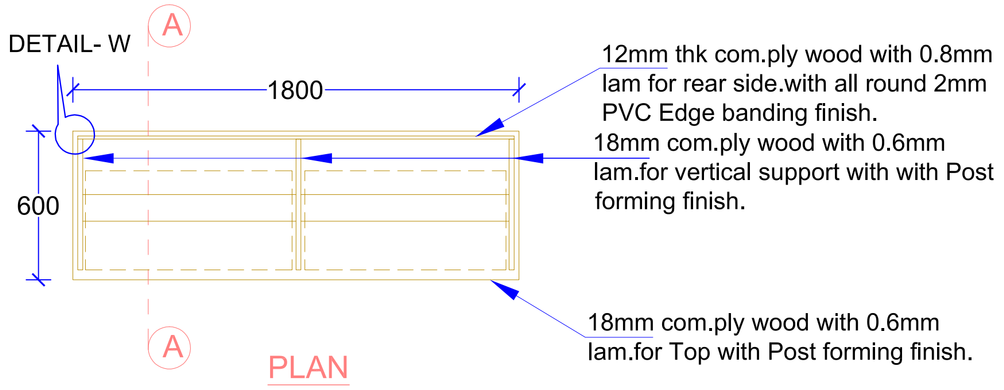

PLAN

Furniture Fittings :

1. Telescopic Channel 400mm - 2Set.

RADIOLOGY OFFICE
WORK TABLE WITH KEY BOARD
SIZE - 1800 x 600 x 750 - 1NO

SCHEDULE ITEM NO: a1

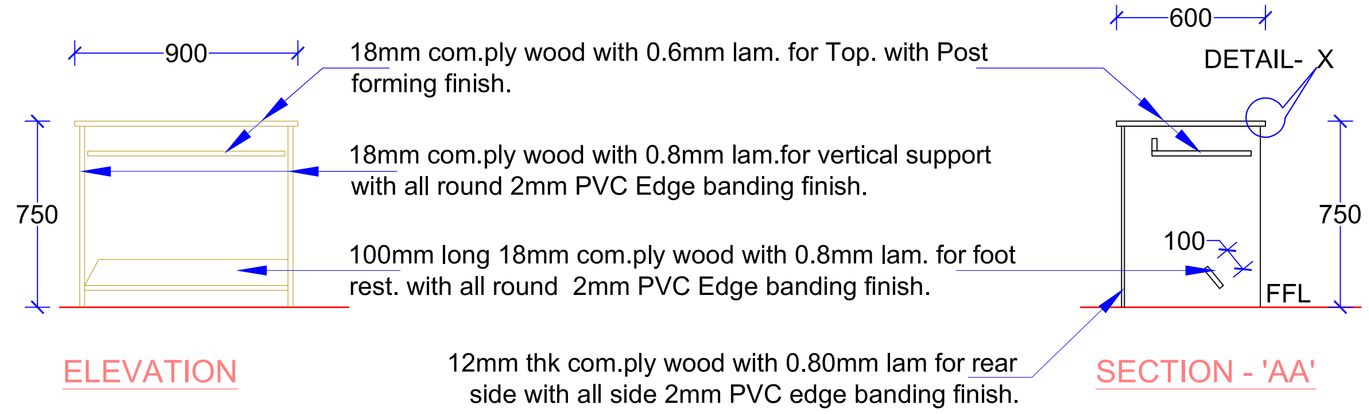

ELEVATION

SECTION - 'AA'

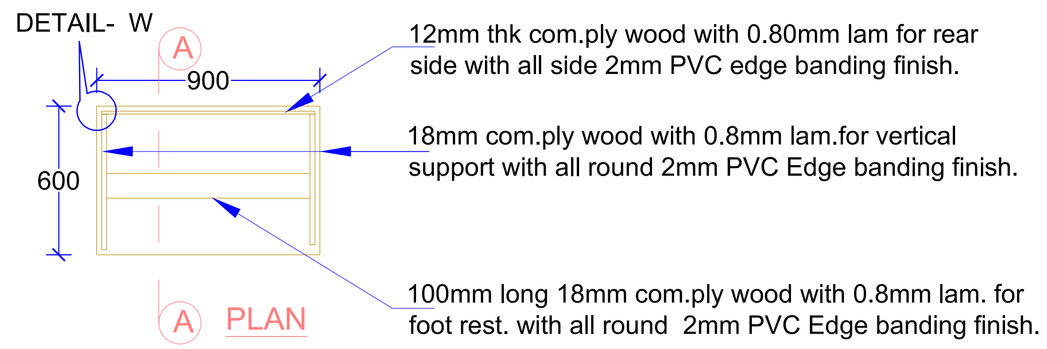

PLAN

Furniture Fittings :

1. Telescopic Channel 400mm - 1Set.

RADIOLOGY OFFICE
WORK TABLE WITH KEY BOARD
SIZE 900 x 600 x 750 - 1No

SCHEDULE ITEM NO: a5

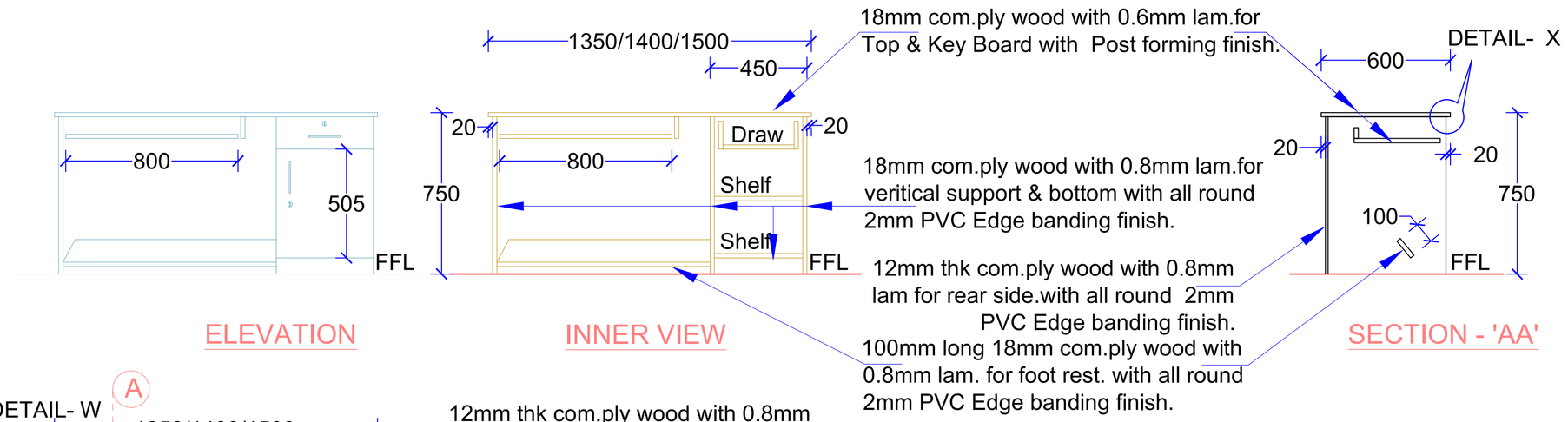

ELEVATION

INNER VIEW

SECTION - 'AA'

Furniture Fittings :

1. SS Clipon Hinges - 2Nos.
2. Telescopic Channel 400mm - 1Set.
3. Telescopic Channel 500mm - 1Set.
4. SS Handle 100mm "D" Type - 2Nos.
5. Hafele Lock & Key - 2Nos.

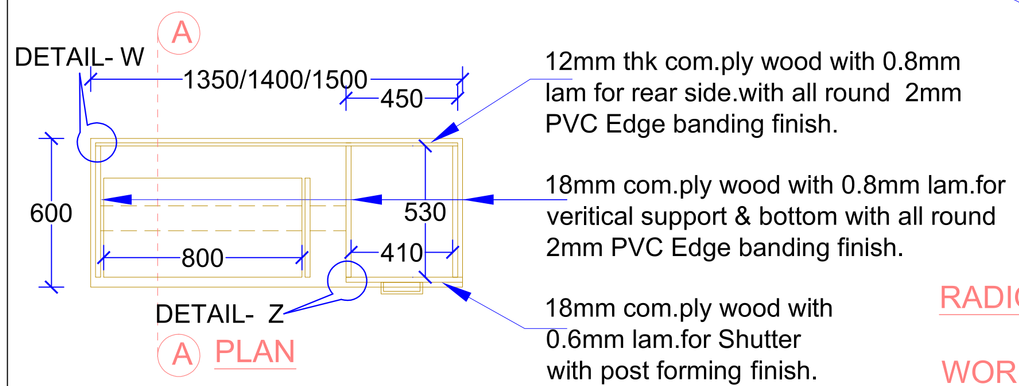

PLAN

RADIOLOGY OFFICE

WORK TABLE WITH KEY BOARD & DRAWER / CUP BOARD
SIZE -1500 x 600 x 750 - 1No

SCHEDULE ITEM NO: a2

WORK TABLE WITH KEY BOARD & DRAWER / CUP BOARD
SIZE -1350 x 600 x 750 - 2Nos.

SCHEDULE ITEM NO: a3

WORK TABLE WITH KEY BOARD & DRAWER / CUP BOARD
SIZE -1400 x 600 x 750 - 2Nos.

SCHEDULE ITEM NO: a4

Note:

1.All dimensions are in mm.
2.All Mica make Merino/Sunmaica/Green lam or equivalent
3.All sizes mentioned are approximate to suit at site conditions and actual measurements to be taken before executing the work.
4.Commercial ply wood make - Kit ply/sharon/century or equivalent.
5.All furniture fittings make - Hafele/Ebco/Hettich.
6.All shelf fixed with minifix & cam
7.The rate inclusive of furniture fittings
8.All hidden faces of plywood should be of white laminate (0.7mm thk) unless otherwise mentioned.
9.Furniture color to be finalized by the user department.
10.All glass items are of modi/approved equivalent make.
11.Rate inclusive of wire manager / up to 3" dia wherever needed
12.Modular regular switch box will be supplied by the electrical dept.and the fixing to be done by the contractor wherever needed.

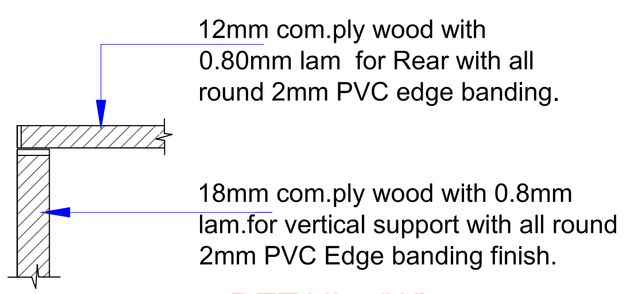

DETAIL 'W'

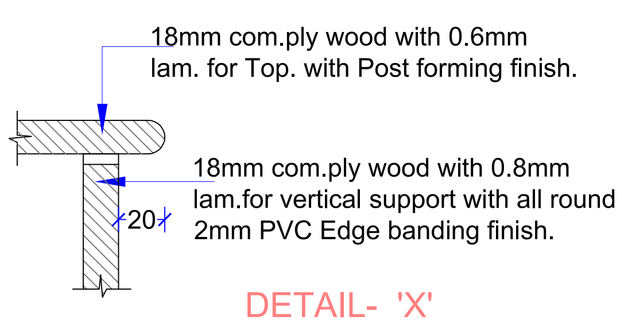

DETAIL- 'X'

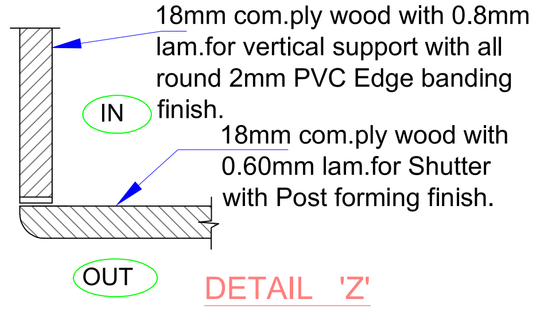

DETAIL 'Z'

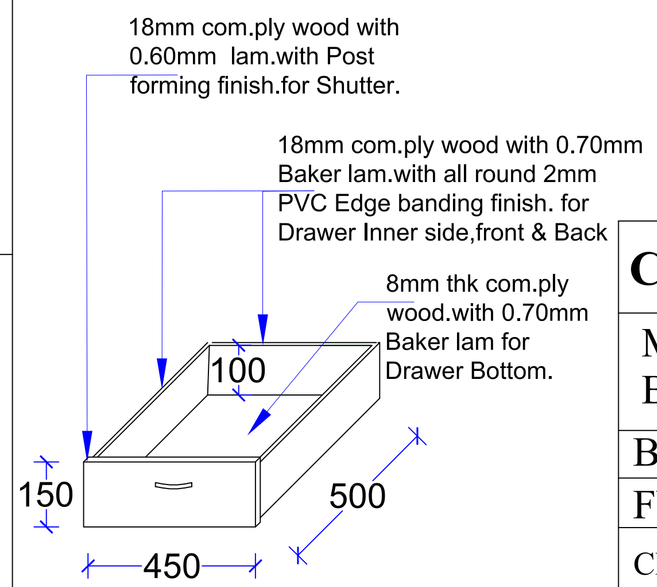

DRAWER DETAIL

FOR TENDER PURPOSE ONLY

CHRISTIAN MEDICAL COLLEGE-VELLORE

MODIFICATION OF NEURO OFFICE GROUN AND BASEMNT FOR RADIOLOGY IN CMC MAIN CAMPUS

BASEMENT FLOOR

FURNITURE DETAIL DRAWING

CHECKED:DEVAKI.G	DRAWN: DHINAKARAN	PLANNING ENGINEER:
DATE : 18.05.2024	DRG.NO:CMC/R/F-002	